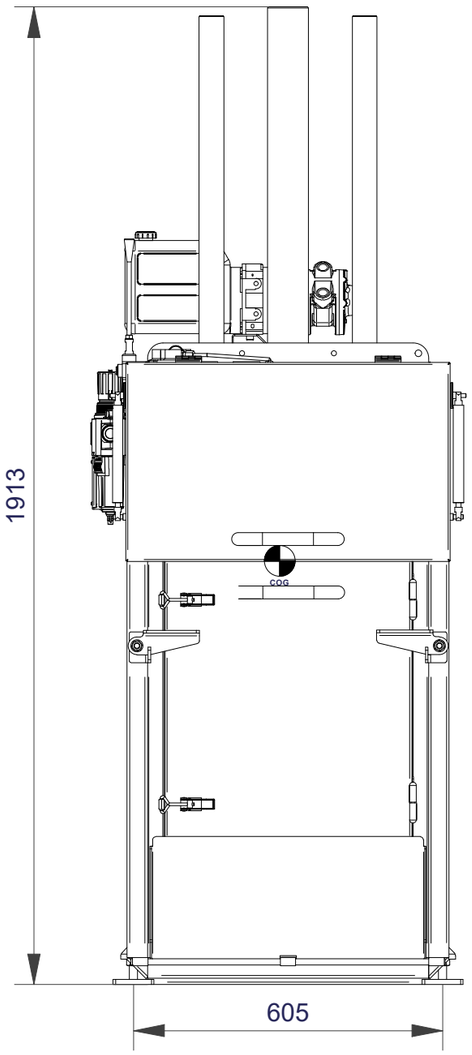

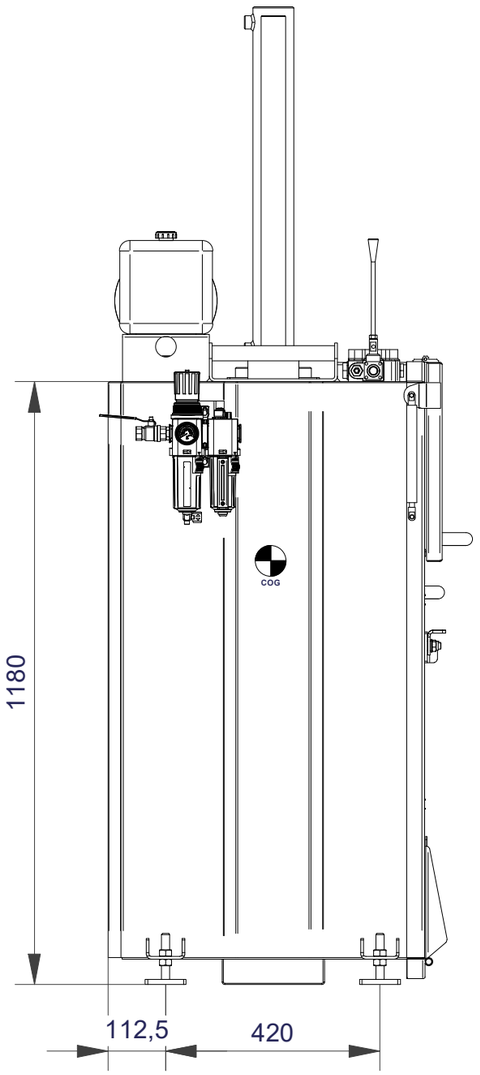

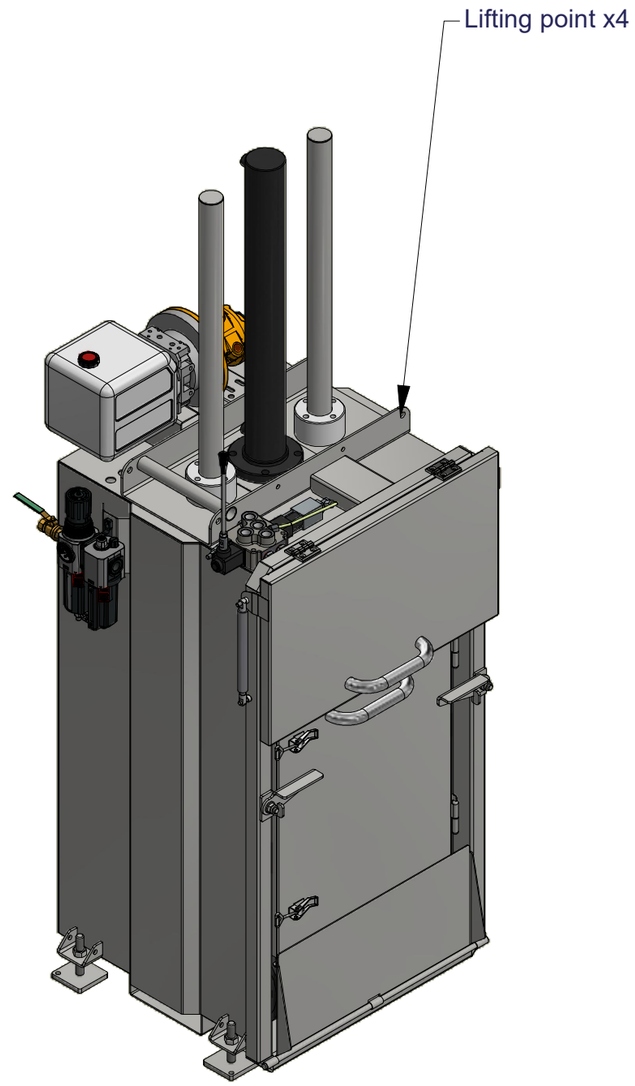

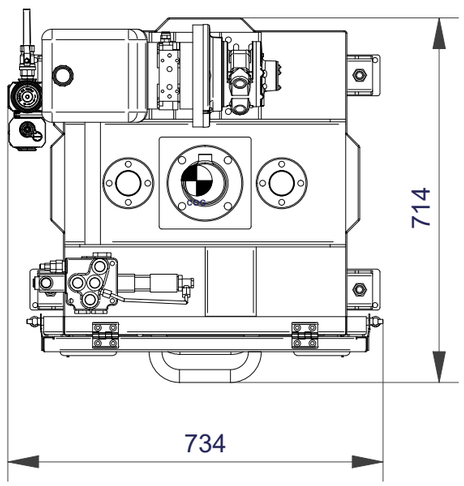

Designer : BHN	Date : 13.01.2015	delitek
Projection :	Total Mass : 190.0 kg	
DT-200 MC-P Hydr/pnaumatic	Sheetsize : A3 / Sheet : 1 /1 / Rev : H	
	Part Number : DT-200 MC-P	
	Drawing Number : GA16121212161814221018 02	

This document and its contents are the exclusive property of Delitek AS and must not be copied, reproduced, transmitted or communicated to any other party or used for purpose not expressly permitted by Delitek AS